VINFAST



VinFast VF6 EV SUV

First Responder Guide

Legal

Legal notice:

This guide was created only for first and second responders who have specific training in the area of technical assistance following road accidents, and are therefore able to carry out the activities described in this guide. Specifications and optional equipment for VinFast vehicles and the range of vehicles made by VinFast are subject to ongoing changes. VinFast therefore explicitly reserves the right to make changes or modifications to this guide at any time. The information factors in the state of knowledge at the date of creation.

Please note:

The information in this guide is not intended for end customers, nor is it intended for workshops and dealerships. End customers can find information about the functions of their vehicles and important safety information on vehicle and occupant safety in the Owner's Manual of the respective VinFast vehicle. Workshops and authorized dealers can obtain repair information from the usual sources known to them.

Contents

This First Responder Guide covers emergency vehicle shutdown information for the VinFast VF6 EV SUV. The VF6 is an all-electric vehicle and contains high voltage (HV) components. The high voltage battery is the main energy source. High voltage refers to systems with DC voltage above 60V or AC voltage above 30V.

The information in this guide is intended for use only by qualified and trained first responders. This guide describes how to identify high voltage components and safely handle them during an emergency. It also explains how to disable the high voltage system and provides safety information specific to the VF6, including high-strength materials used in the vehicle structure. Failure to follow the practices recommended in this guide can result in serious injury or death.

Warnings 4

0. Rescue Sheet 5

1. Identification / recognition 6

2. Immobilisation / stabilisation Immobilization / stabilization lifting 9

3. Disable direct hazards / safety regulations 11

4. Access to the occupants 16

5. Stored energy / liquids / gases / solids 25

6. In case of fire 29

7. In case of submersion 30

8. Towing / transportation / storage 31

9. Important additional information 33

10. Explanation of pictograms used 34

Warnings

 DANGER	 WARNING	 CAUTION
Will result in serious personal injury or death.	May cause serious injury or death.	May cause personal injury or component damage.



Always assume that high voltage parts are energized. Always wear the appropriate Personal Protective Equipment (PPE). Contact with high voltage current can cause serious injury or death.

Recovery of a submerged vehicle without appropriate PPE can result in serious injury or death.

Batteries can release flammable or toxic gases if they are damaged. Gases can be ignited by a spark or a heat source. Pressure from expanding gases can build up in battery packs and cause an explosion. These situations can lead to serious injury or death.



Do not use the high voltage battery to lift the vehicle. The high voltage battery could be damaged.

If the electrical vehicle is on fire, it can be extinguished with large quantities of water. Use water from a hydrant or other nearby water sources whenever possible.

Lithium-ion batteries can spontaneously self-ignite. Batteries can reignite after a fire has been suppressed. This can occur several hours after an event that has caused damage or as the result of incorrect use. Always wear appropriate PPE.

PPE must be worn for all practices discussed in this guide. Appropriate PPE is required for the procedure to disable the high voltage system. PPE may include rubber gloves, safety glasses, electrical hazard footwear, earplugs, hardhats and face shields, respirators, or arc-rated clothing and undergarments.

0. Rescue Sheet

VF6
5Doors EV SUV
From 2023

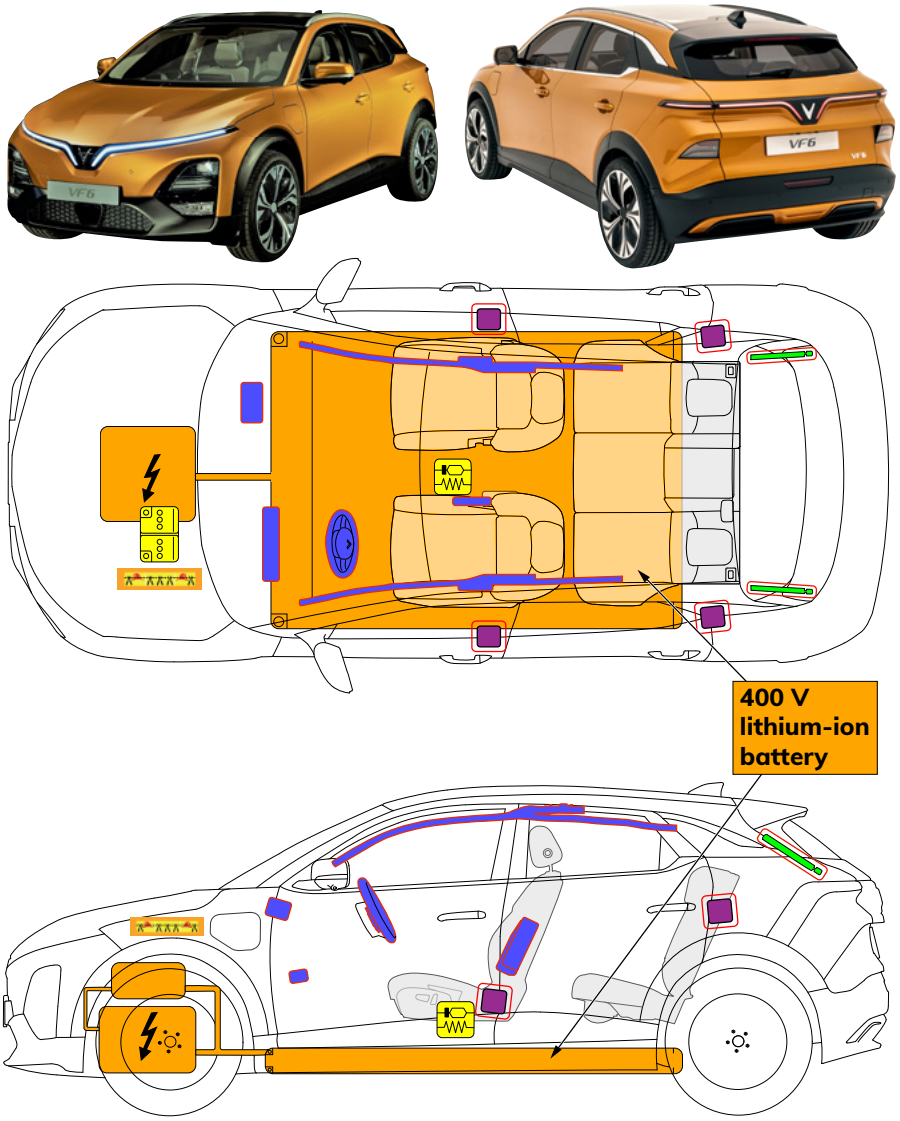

	Airbag inflator/ stored gas inflator		Seat belt pretensioner		Airbag		Gas strut/ preloaded spring
	Battery low voltage		High voltage component		SRS control unit		High voltage power cable
Li-ion	Battery Pack, High Voltage				Cable cut		Left hand drive

	ID No.	Version	Page No.

Ch1. Identification / recognition

Exterior badges identify the VinFast VF6 EV SUV. Each model has distinguishing features. Individual models can be identified by body shape, size, and vehicle design.

In addition, the model name lettering at the rear of the vehicle can also help with identification. The lettering is not there, however, if its removal was requested upon purchase, or it was subsequently removed.

Lack of engine noise does not mean vehicle is OFF: silent movement or instant restart capability exists until vehicle is fully shut down. Wear appropriate PPE.



Vehicle Identification Number

The Vehicle Identification Number (VIN) can be accessed at 4 locations:

1. The VIN stamped plate is mounted on front LH side of the dashboard. Look through the windshield to check the same.
2. The VIN label is installed on lower side of LH B pillar.
3. A stamped VIN is located in the rear cargo compartment.
4. On the Main Display Unit, navigate to Settings > About > Vehicle

1

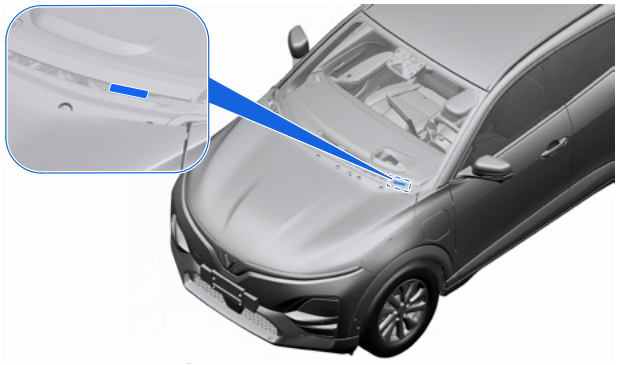

2



3



4



Lack of engine noise does not mean vehicle is OFF: silent movement or instant restart capability exists until vehicle is fully shut down. Wear appropriate PPE.

Engine Compartment

Engine compartment is accessed by opening the hood. Once hood is opened and secured we will find the front engine compartment. See below image.

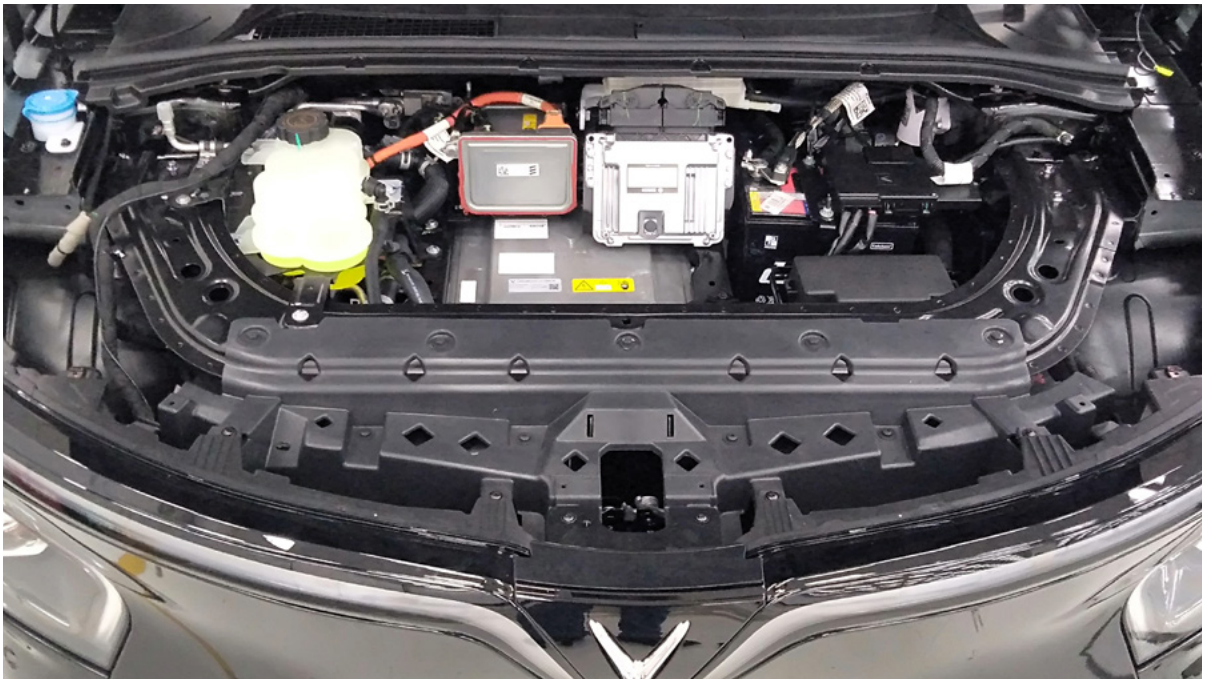

Ch2. Immobilisation/ stabilization/ lifting

The Electric engine is noiseless. The display in the touchscreen shows a message as to whether the electric drive is switched “OFF” or ready for operation **“READY”**.



Stabilization Stabilisation

Wheel rotation generates high voltage and must be prevented while stabilizing stabilizing the vehicle.

Step 1:

Press the Park (P) button on the driver console to put the vehicle in Park Mode and pull up button to engage the parking brake.





Step 2:

Chock the wheels to prevent movement in case the parking brake fails.



Pushing

The vehicle can be pushed short distances to clear the roadway, when it is safe to do so, after rescue operations are over. To put the vehicle in neutral, press the brake pedal and then press 'N' button on the driver console.



Lifting

Do not use the HV battery to lift the vehicle. The HV battery could become damaged. This increases the risk of injury.

Extreme caution is required when lifting the vehicle. The vehicle has a 400-volt Lithium Ion high voltage battery mounted underneath the floor pan. When lifting or jacking the vehicle, only use the designated lifting points marked in Green.



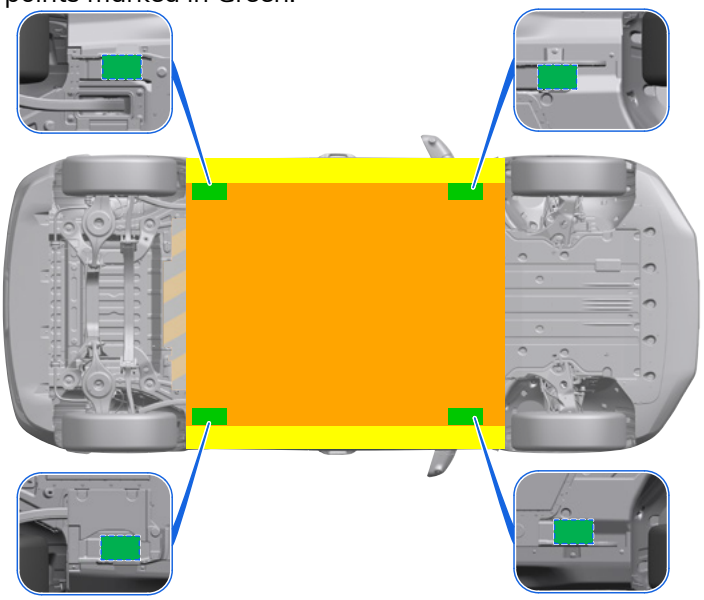

This guidance applies only to non-deformed vehicles. If the VF6 involved in a crash is deformed, first responders must decide how to safely lift the vehicle.

Ch3. Disable direct hazards / safety regulations

Open the Hood

See Opening the Hood (page 20).

Main Disabling Method

1. The first responder cut loop is located in front compartment, in front of the 12V battery.
2. Find the negative cable of the 12V battery. Look for the yellow cut loop label (1) and cut through the harness on each side of the label to remove a section of the cable. This ensures that the cable ends cannot reconnect accidentally.

Cut the First responder Cut loop at two places to interrupt the 12V supply to the high voltage battery.

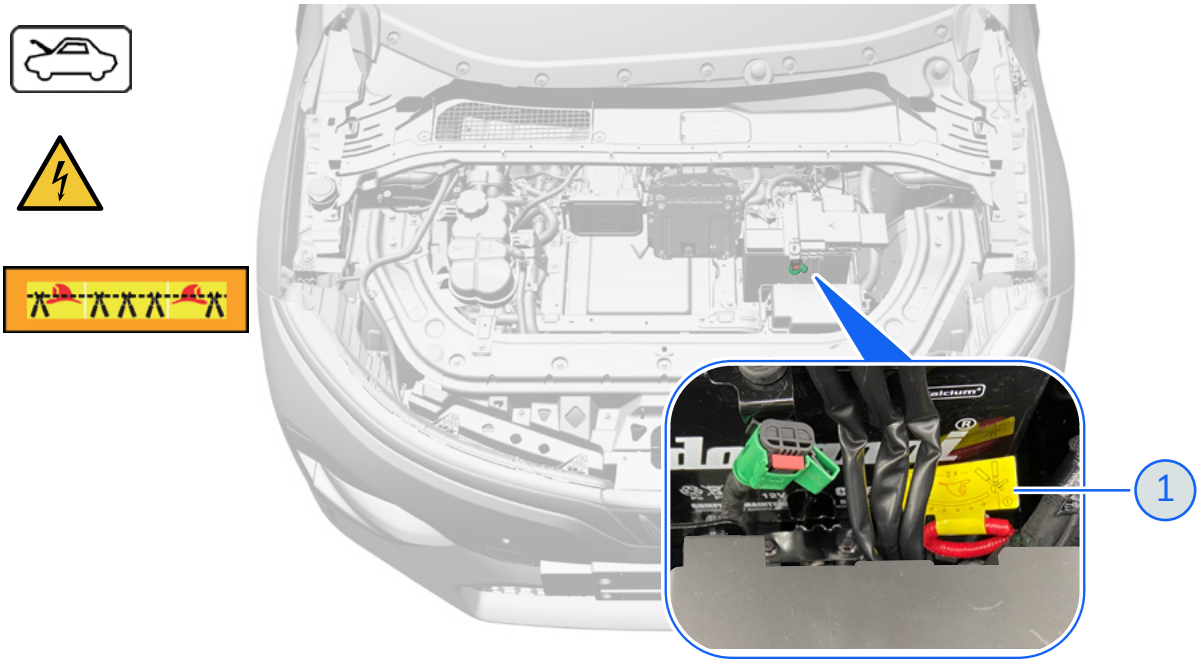

The high voltage will dissipate in about 5 minutes.

If the key is left outside the vehicle, it will shut down automatically.

Keeping the key away from the vehicle will prevent the electrical systems from being accidentally activated.

Do not cut the Orange high voltage cables. Cutting these cables can result in serious injury or death. Always assume the high voltage cables and components contain high voltage.

Disabling Method for Service

The **Mechanical Service Disconnect (MSD)** is located near the 12V battery in the front compartment. The MSD is a low voltage connector which interrupts the 12V power supply to the high voltage battery when disconnected. Disconnecting the MSD initiates the high voltage system shutdown.

Remove the MSD as follows:

1. Pull out the red safety cap.
2. Pull out MSD tab.



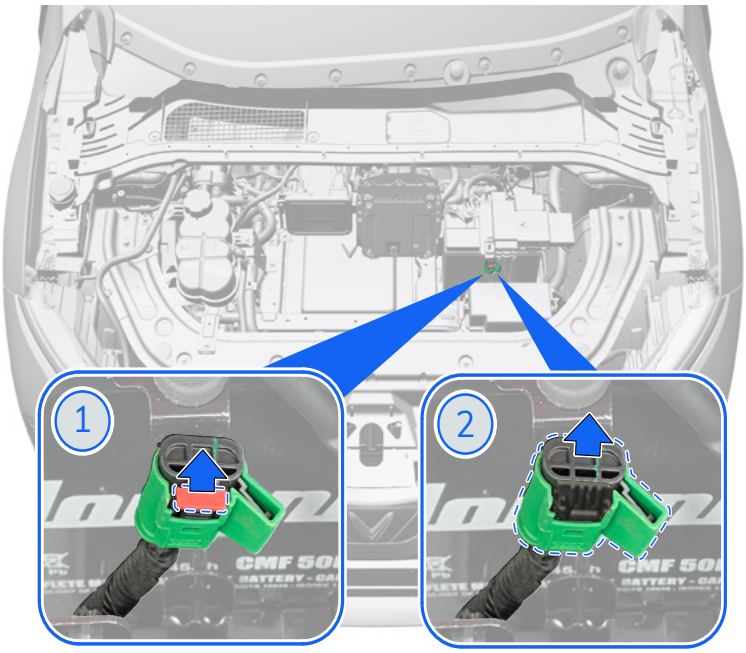

Disable High Voltage System While Charging

Remove the charging handle from the charging socket to disable the high voltage system. The charging handle can only be removed when the vehicle's doors are unlocked. If the charging handle is not removed from the charging port within 60 seconds after unlocking the doors, charging will resume.

Mechanical emergency release cables for charging handle and charge port door are located on the left side within the front compartment and next to the hood hinge. The emergency release cable for charging handle is located near the wiper motor within the front compartment.

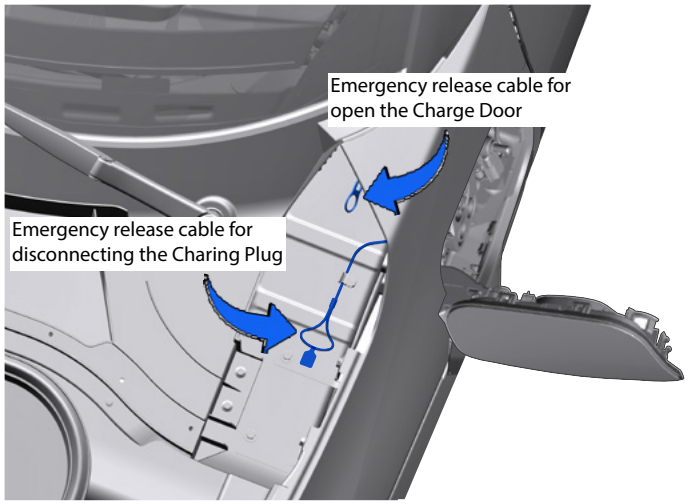

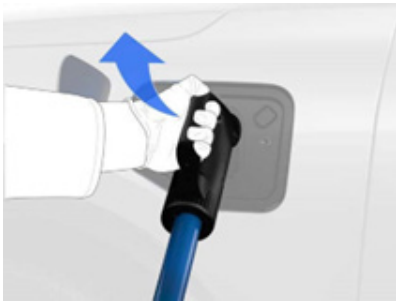

Press **"Stop Charging"** on the Infotainment screen, to stop the charging process and to release the charging handle locking pin.

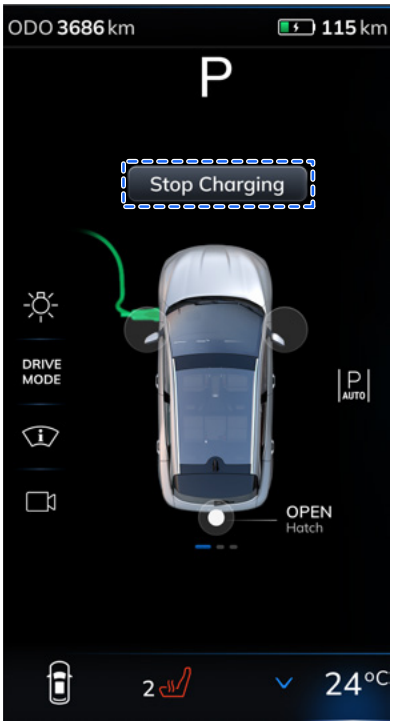

Ensure the vehicle is powered **OFF**. Contact with moving wiper motor mechanism may cause serious injury.

- Press the **Unlock** button on the key fob twice.

  OR

  Tap **'Stop Charging'** on the Infotainment screen inside the vehicle.
- Pull the **Mechanical Emergency Release Cable** (1) to disconnect the charging handle.
- Remove the charging handle from the charging port.



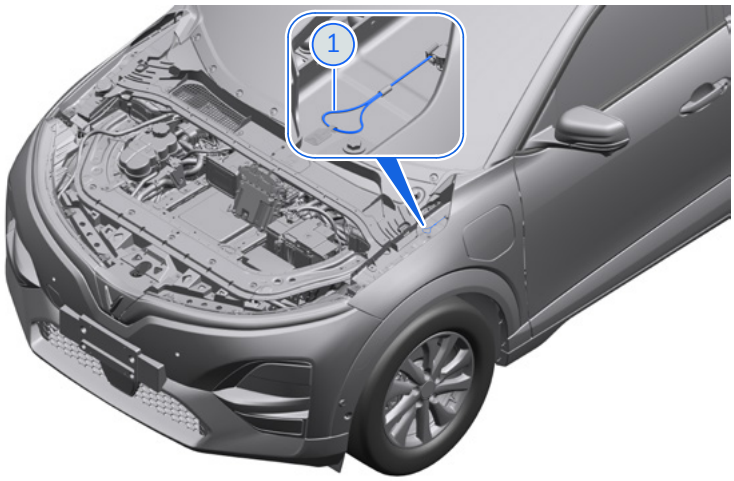

Disabling LV System

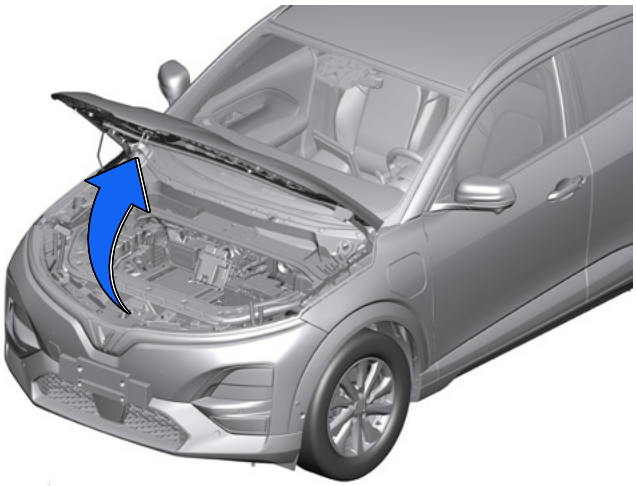

Loosen the screw (1).

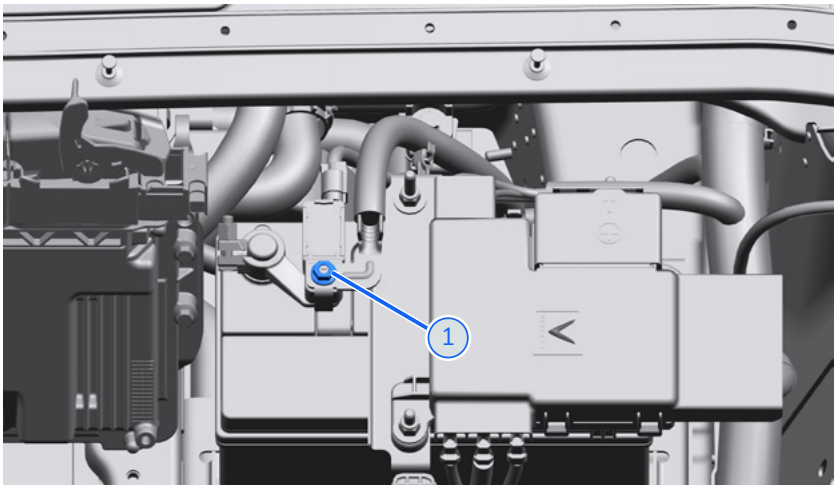

To disconnect the 12V battery, remove the negative cable (2).

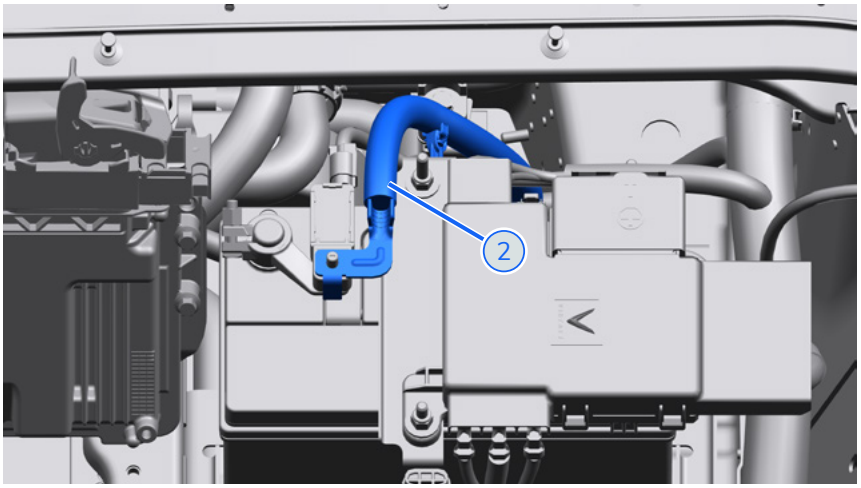

Ch4. Access to the occupants

Accessing the Vehicle

Opening doors from the outside

Pull the **exterior** door handle to open the door.

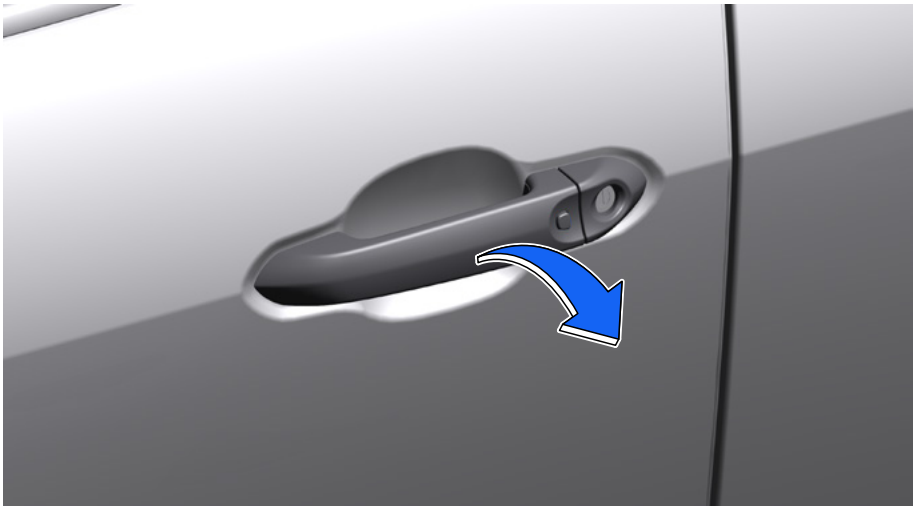

Opening doors from the inside

Pull the **interior** door handle to open the door.

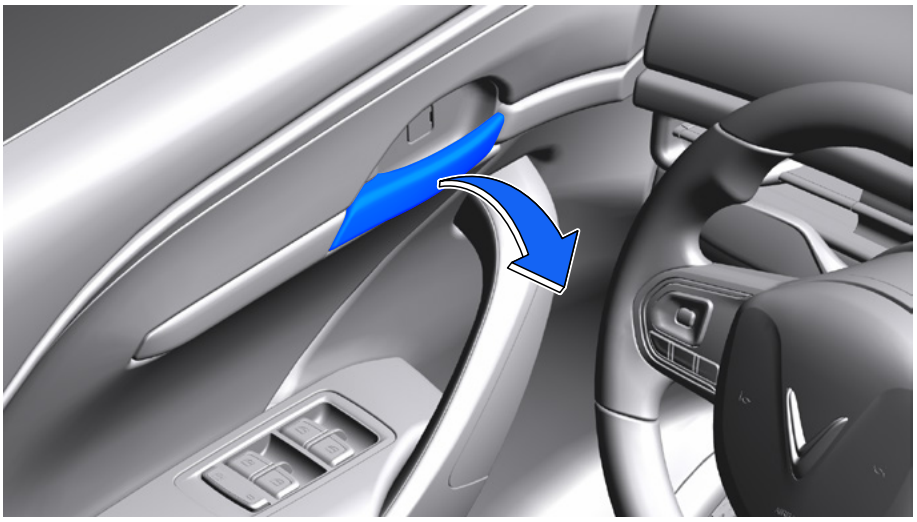

If the exterior door handles do not work, break the window to access the interior door handle to open the door

Adjustable Seat Adjustment

The variant is equipped with a 8 Way Power seat adjustment.

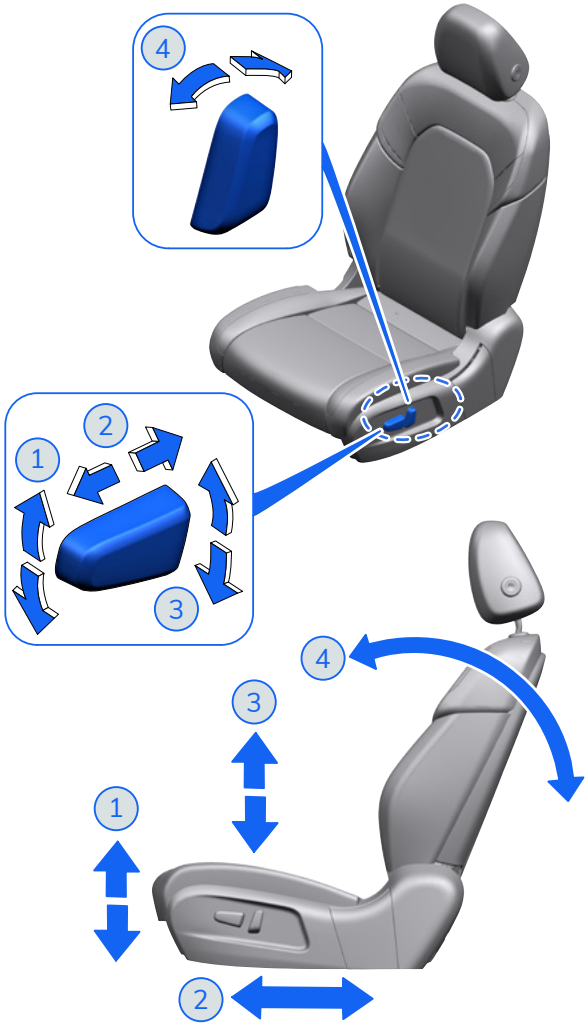

1. Tilt Adjustment:

To adjust the seat cushion (tilt) upward or downward, pull/push the front section of the adjustment button upward or downward.

2. Forwards/Rearward Adjustment:

To move the seat forward or rearward slide the adjustment button in the intended direction of travel.

3. Seat Height:

To move the seat cushion upward or downward, pull/push the rear section of the adjustment button upward or downward.

4. Seat Backrest Angle Adjustment:

To move the backrest forward or backward, pull/push the backrest button forward or backward.

The variant is equipped with a 6 Way manual seat adjustment

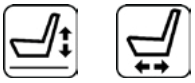

1. Seat Height:

Pull/Push the lever several times up or down to adjust the seat height.

2. Seat backrest Angle Adjustment:

Operate the lever. Move the seat backrest to the desired position, and then release the lever to lock the seat backrest in place. Push and pull on the seat backrest to make sure it is locked.

3. Forwards/Rearward Adjustment:

To move the seat forward or rearward, pull the lever up and adjust the seat in desired position. Release the lever to lock the seat in position. Try to move the seat back and forth to be sure it is locked in place.



Steering Wheel Adjustments

Do not make steering wheel adjustments while driving.

Unlock the steering column by releasing the lever and rotating the lever downwards. Adjust the steering wheel to your preferred position. Lock the steering wheel in the adjusted position by rotating the lever up to its original position.

Manual adjustable steering column allows for the following steering wheel adjustments.

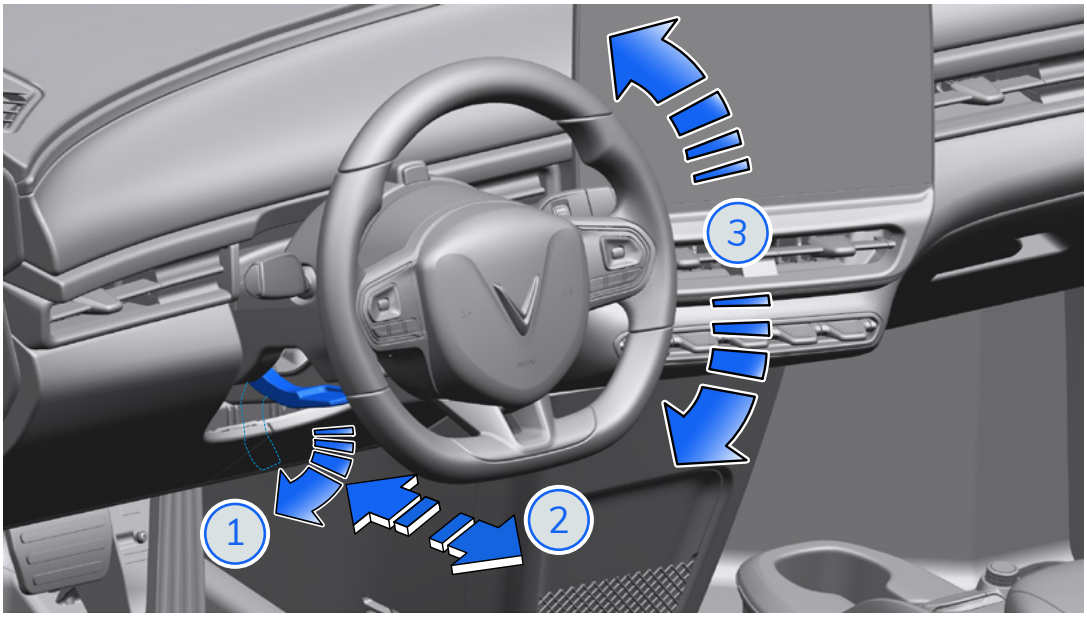

To adjust the steering position:

1. Releasing lever to make adjustments.
2. Fore-aft steering wheel adjustments.
3. Up/Down Steering wheel adjustments.

Ensure the steering wheel column is secured in locked position before driving.

Do not control the steering wheel by the horn pad. If the Airbag deploys it may result in injury to the driver's arms, hands and head.

Do not sit close to the steering wheel when driving. In an event of a collision this may interfere with the deployment of Airbags and may increase the risk of occupant injury.

Opening the Hood

The hood release lever is located under the dashboard on the driver side. Pull the hood release lever twice to open the hood. Lift the hood manually from front side and secure properly using stay rod.

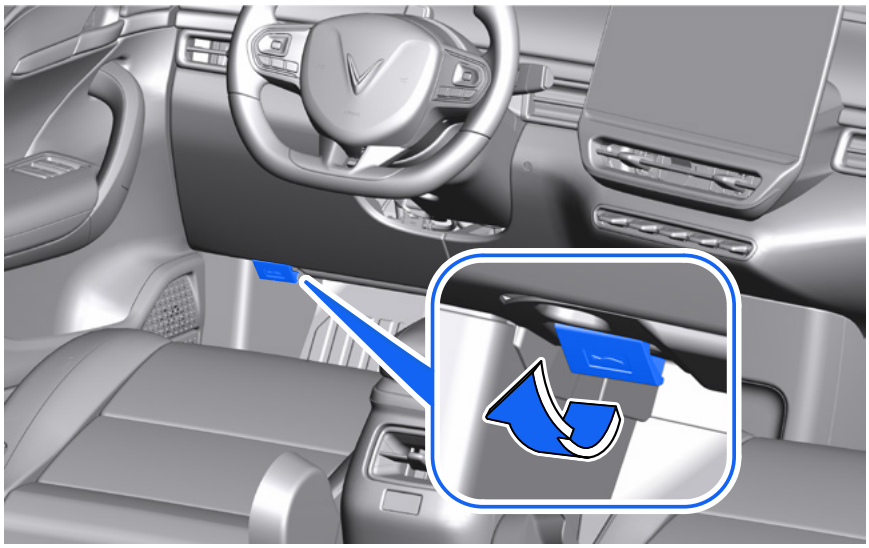



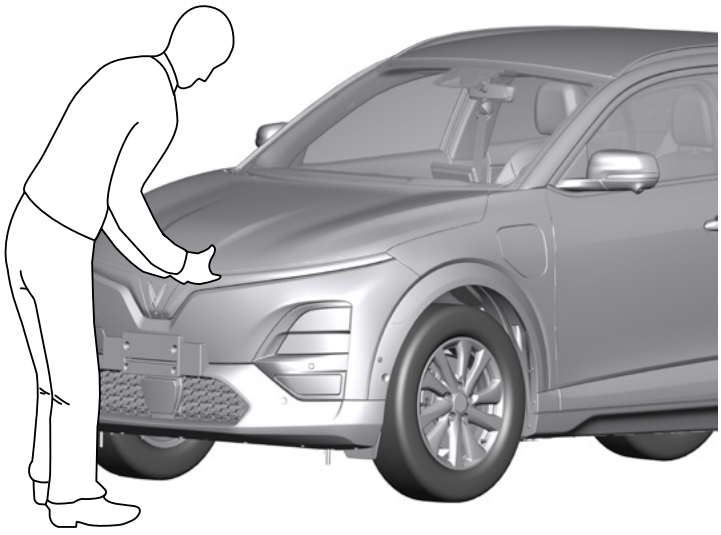

Opening the Tailgate

Opening the tailgate (with power)

- Press Central Locking Button (located on the center console in between the front seats) or the key fob unlock button to release the tailgate.

  OR

- Press the button at the base of the tailgate.
- Manually lift the tailgate.

  OR

- Touch the target or the text **OPEN Hatch** on the Infotainment screen.
- Manually lift the tailgate.

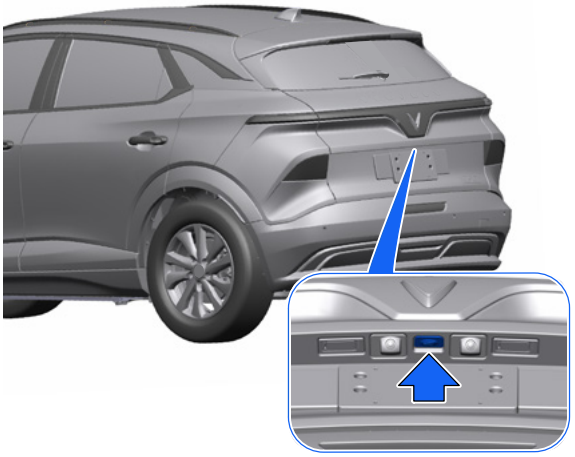

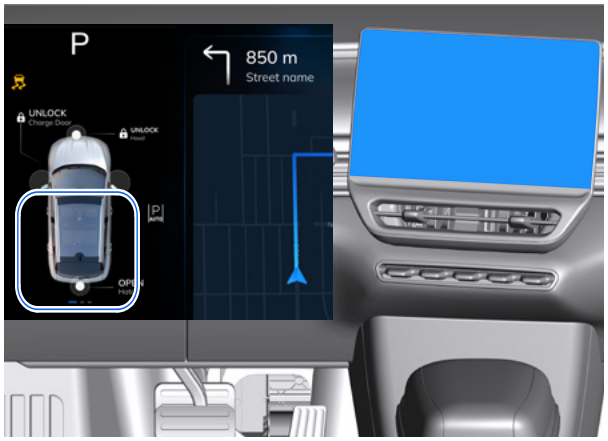

Opening the tailgate (without power)

If 12V power supply is not available, the tailgate can be opened manually from inside the vehicle. To access the emergency safety release, open the inside cover on the lower side of the tailgate. Press the lever downwards to open the tailgate.



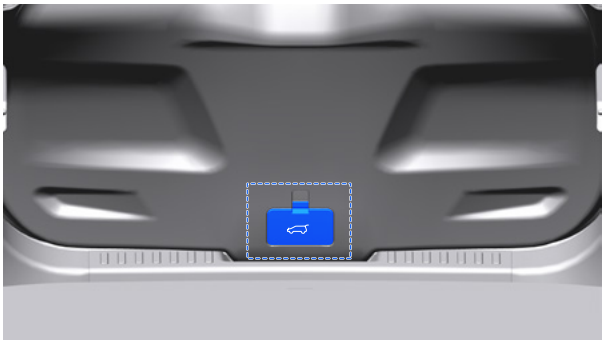

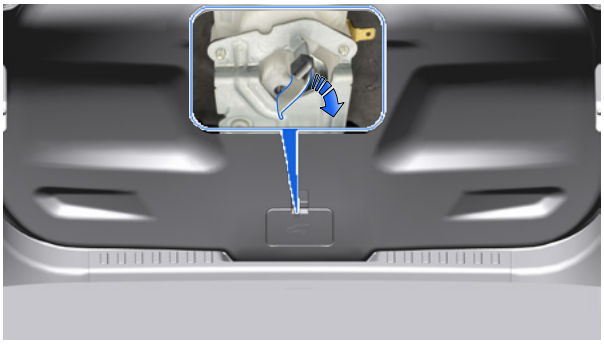

Cutting the Vehicle

Do not crush or cut the areas which house the high voltage and high gas pressurized components. Failure to comply can cause severe injuries or death.

Always assume that high voltage parts are energized. Always wear appropriate PPE. Contact with high voltage current can cause serious injury or death

The vehicle contains high voltage components, pressurized gas struts and other hazards that would be dangerous if damaged or ruptured. There is a risk of serious injury or death if a cut is made in these areas.

The areas shown in orange are the locations of high voltage components and pressurized gas struts.



Reinforcement locations

To protect vehicle occupants, extra-high-strength steel is used. Reinforcements are shown in Teal. Powerful cutting equipment must be used to cut or crush these areas.

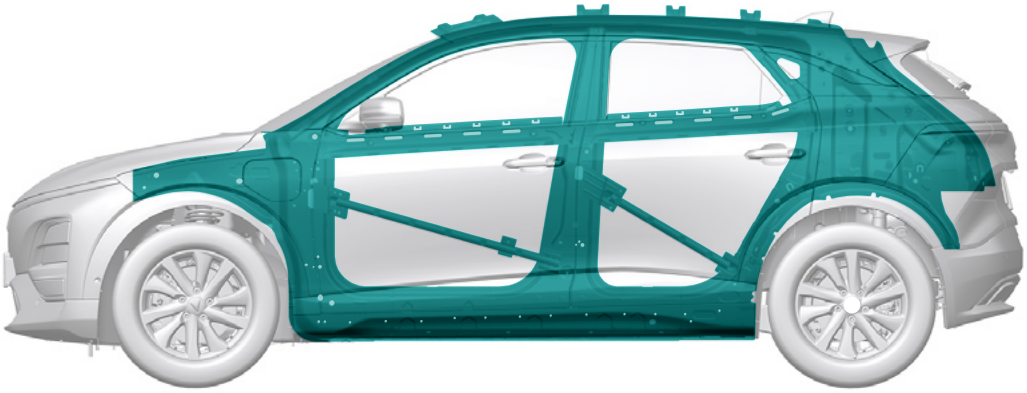

Glass Types

Glass types:
A. Laminated glass
B. tempered glass

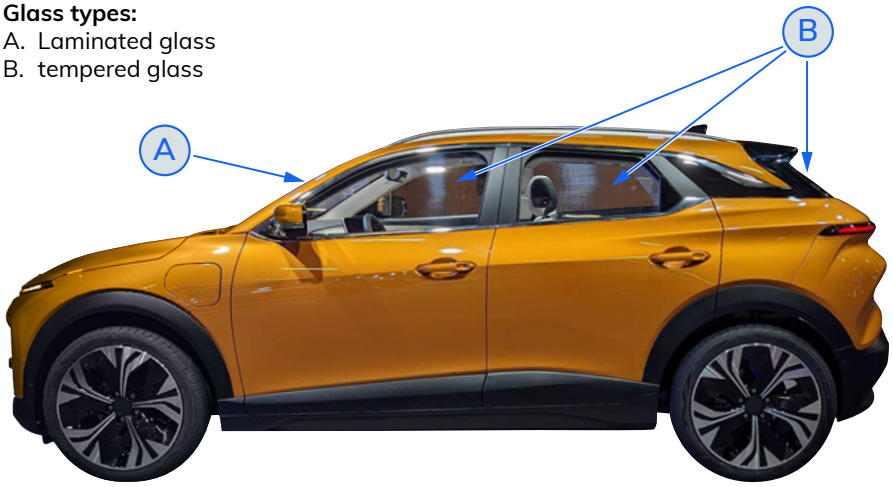

Airbags

When the airbags are deployed, the vehicle will disconnect the high voltage battery from all components and thus deactivate the high voltage. Airbag locations are identified below in Blue.



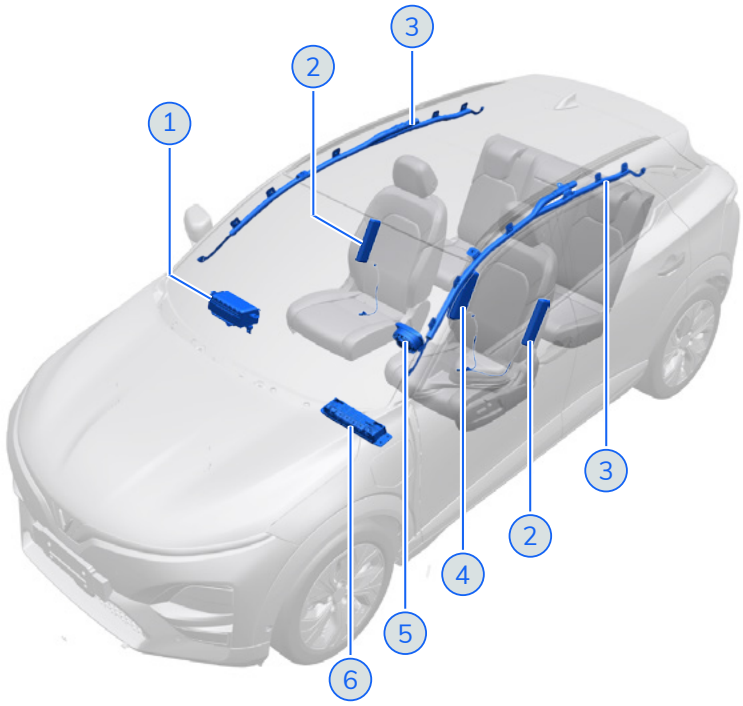

1. Front passenger airbag
2. Seat-mounted side airbags
3. Curtain airbags
4. Front seat middle airbag **(for EU Market only)**
5. Driver airbag
6. Knee airbag **(for US Market only)**

Inflators

There are safety risks present when cutting the vehicle. Follow all safety precautions while working on pyrotechnic devices. Failure to comply could result in serious injury or death.

Curtain airbag inflation cylinders are located above the B Pillar near the roof. They are outlined in Red.

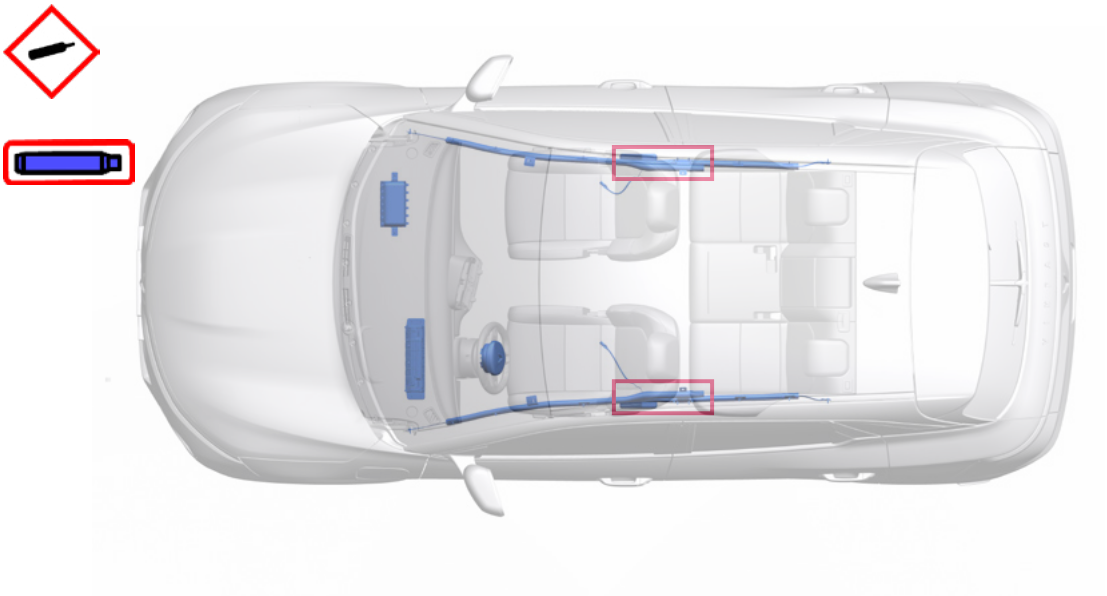

Seat Belt Pre-Tensioners

Pyrotechnic seat belt pre-tensioners are located at the bottom of the B-pillars and behind the rear seats. The seat belt pre-tensioners are outlined in Red.

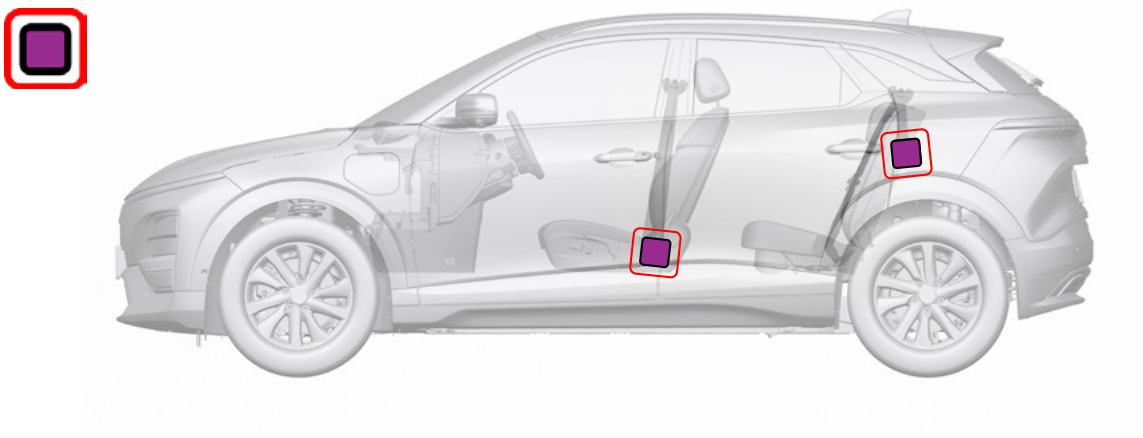

Ch5. Stored energy / liquids / gases / solids

Stored energy / liquids / gases

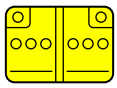		12V
		400V
		13.5L 50% Glycol & 50% Water Mixture
		R1234yf (650g)

High Voltage Components

Assume that high voltage components are always energized. Always wear appropriate PPE when coming into contact with the vehicle. Contact with high voltage current can cause serious injury or death.

The vehicle contains high voltage components. All high voltage components are marked with warning labels, except for high voltage cables. The high voltage cables are easily identified by their Orange warning color.

Examples of warning labels on high voltage components and batteries:

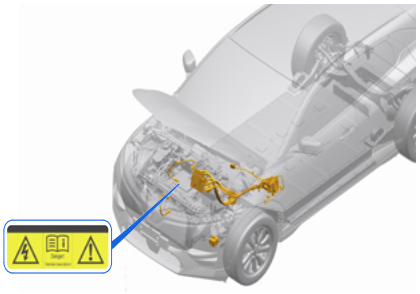



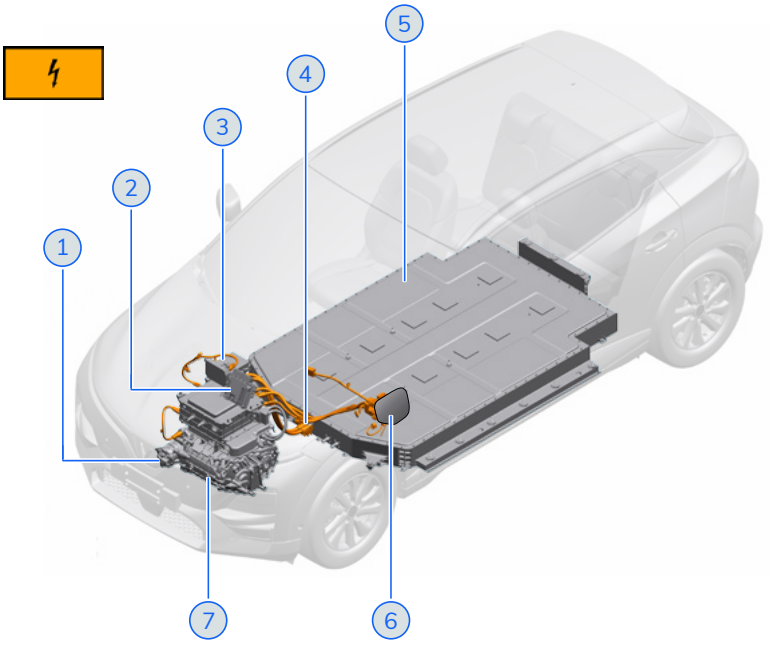

1. High Voltage Compressor
2. Vehicle Control Unit
3. High Voltage Heater
4. High Voltage Cabling
5. High Voltage Battery
6. Charge Port
7. Electric Drive System (EDS)

High Voltage Cables

The high voltage system must be disabled before disconnecting any components. Do not touch, cut, or disconnect the following items until the high voltage system is disabled:

- any orange high voltage cables
- any high voltage connectors
- any high voltage components

Failure to comply may result in injury or death due to electric shock.

High voltage cables are Orange in color for immediate recognition.

Look for the yellow cut loop label on the first responder cut loop, and cut through the harness on each side of the label to remove a section of the cable to disable the 12V power supply to high voltage system, see ***Disable Direct Hazards***.



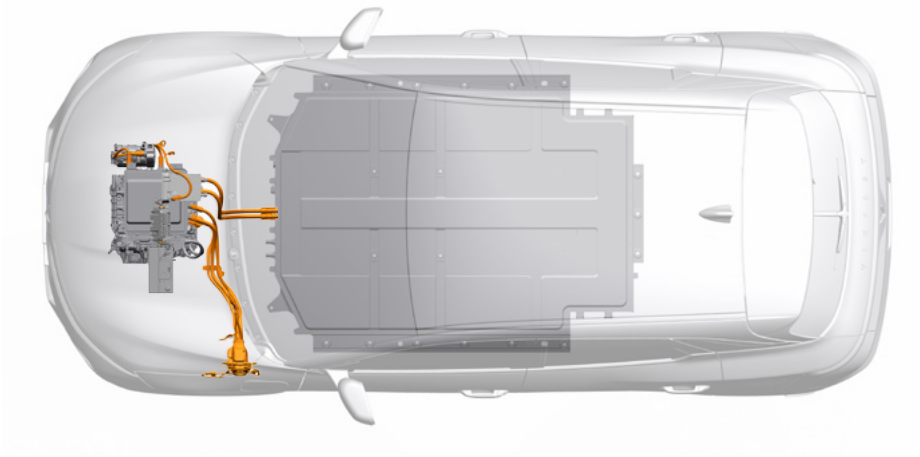

Batteries

Do not use the high voltage battery to lift the vehicle. The battery could be damaged. This increases the risk of injury.

High Voltage Battery

The vehicle has a 400-volt Li-ion high voltage battery mounted underneath the floor pan. When using rescue equipment, ensure that the floor pan is not breached. The high voltage battery or high voltage cables may be damaged. Contact with high voltage battery or high voltage cable can result in serious injury or death.



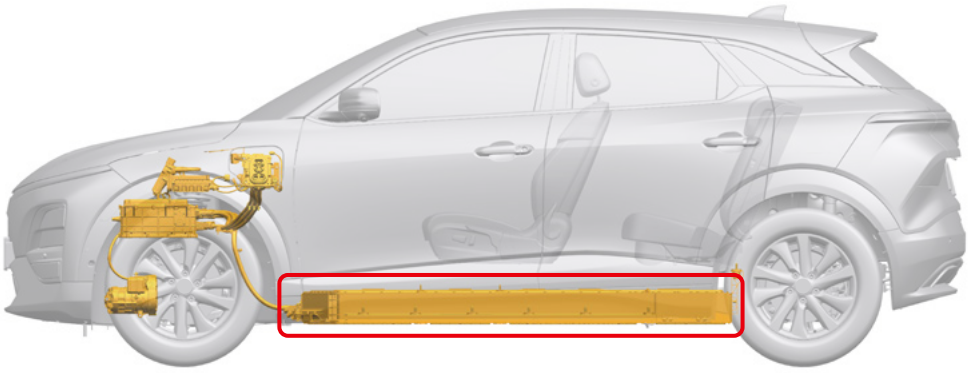

Low Voltage (12V) Battery

The vehicle has a low-voltage 12V battery located under the hood. The 12V battery supplies power to the high voltage contactors. This allows high voltage current to flow in and out of the high voltage battery. High voltage current cannot flow when the 12V battery is disconnected.

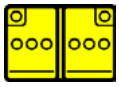

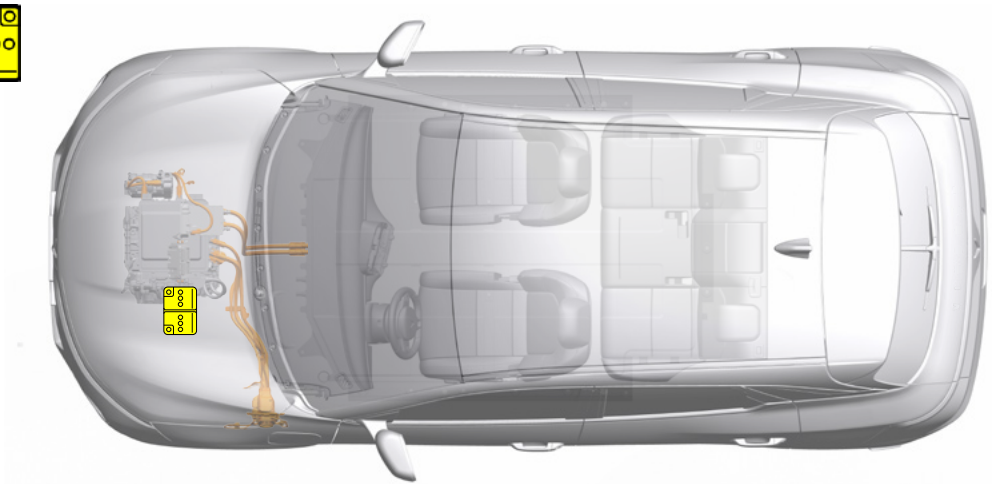

6. In case of fire

Extinguishing a Fire



If the electric vehicle is on fire, it can be extinguished with large quantities of water.



Use water from a hydrant or other nearby water sources whenever possible. Flooding a battery with water can also extinguish the fire.



Lithium-Ion batteries can spontaneously self-ignite. Batteries can reignite after a fire has been suppressed. This can occur several hours after an event that causes damage. Always wear the appropriate PPE and self-contained breathing apparatus during firefighting activities.

First Responder:

- Provide large quantities of water to extinguish the fire
- Monitor the temperature of the battery after extinguishing the fire
- Arrange for evacuation. Remember that the battery might reignite
- Quarantine the vehicle in case of re-ignition

High Voltage Battery Fires:

- Flooding a battery with water can extinguish the fire
- If no water is available, use a dry chemical or other typical fire-extinguishing agent until water is available
- The battery can create dangerous gases when it ignites

Gaining Access to Battery:

- If it's determined safe to do so, raise or tilt the vehicle to gain direct access to the battery
- Do not open the battery
- Only apply water inside the battery if a natural opening exists

Re-Ignition:

- The battery could reignite if it is placed near fire
- Check for remaining heat sources with a thermal imaging camera
- Make sure the battery is fully cooled before moving the vehicle



The high voltage battery system has Lithium-Ion cells. If this type of battery catches fire, it has a low risk of explosion because it contains an oxidizer. This type of battery will continue to burn until it is completely burned out.

Ch7. In case of submersion

Submersion

Recovery of a submerged vehicle without appropriate PPE can result in serious injury or death.

Whether the vehicle is fully or partially submerged, the high voltage system does not pose an increased risk of electric shock. If the vehicle has suffered serious damage in an accident before being submerged, there could an increased risk of electric shock during recovery. Firefighters should follow established guidelines to recover a damaged electric vehicle in a submerged state.

Remove the vehicle from the water and disable the high voltage system as described in chapter Disable Direct Hazard. Make sure to wear the appropriate PPE.



Ch8. Towing, Transportation, Storage

Handling Damaged Vehicle



Monitor the battery temperature after a crash to prevent thermal runaway. Thermal runaway can result in a fire or explosion as the batteries release stored energy. Battery cells can release gases in response to chemical reactions occurring inside the batteries.



Always assume that high voltage parts are energized. Contact with high voltage current can cause serious injury or death. Always wear appropriate PPE.

If the vehicle is damaged in a crash, it should be transported to a safe storage location.

Isolate the vehicle as follows:

- Do not park the damaged vehicle in an enclosed building
- The damaged vehicle should be parked outdoors at a safe distance from other vehicles, buildings, and flammable objects
- Quarantine areas should be established and used whenever possible

Emergency responders must be notified of a thermal runaway. The battery pack must be cooled to stop the chemical reaction.

When using rescue equipment, make sure the floor pan is not breached. Do not push on the floor pan inside the vehicle. The high voltage battery, or the high voltage cables can be damaged. Contact with high voltage battery or high voltage cable can result in serious injury or death. Wait until trained personnel arrive if floor pan is breached.

Vehicle damage

A damaged electric vehicle must not be touched without the proper PPE.

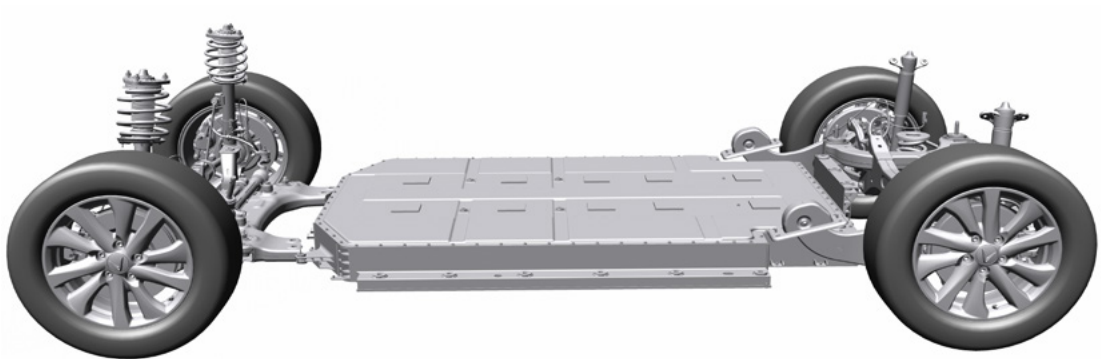

Towing

Lithium-ion batteries can spontaneously self-ignite. Batteries can reignite after a fire has been suppressed. This can occur several hours after an event that has caused damage. Always wear the appropriate PPE.

Switch **OFF** the vehicle's high voltage system before transporting the vehicle.

Place the complete vehicle on the tow truck bed / flat bed for transportation. Put the vehicle in **Neutral Mode (N)**, disengage **Parking Brake (P)**, and turn **OFF** the vehicle.

While towing, the vehicle must not have any wheels in contact with the road surface.

The wheels must be secured properly using an eight-point tie-down method.

Drive Units

The vehicle is equipped with a front drive unit located at the front axle. The high voltage battery sends **Direct Current (DC)** energy to the **Electric Drive System (EDS)** to rotate the wheels.

Wheel rotation can produce electricity in the **Electric Drive System (EDS)**. This could result in overheating of high voltage components or cause further damage. The wheels should be chocked to prevent movement.

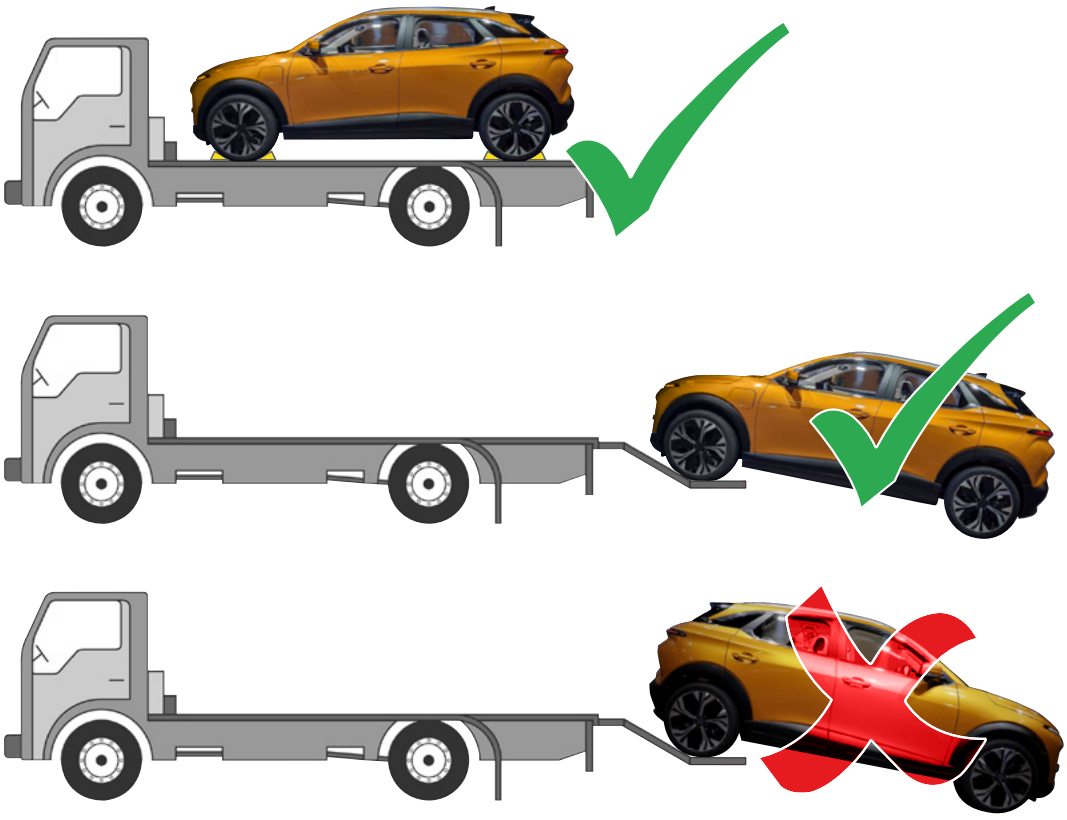

Ch9. Important Additional Information

First Responders and Second Responders with emergencies, call VinFast Assistance Hotline.

First responder information can be found at https://vinfastauto.eu/en

First responders and training officers who have questions, contact: info.eu@vinfastauto.com

In case of any more information or assistance required you can contact the manufacturer. the manufacturer details are given below.

VINFAST TRADING AND PRODUCTION JOINT STOCK COMPANY

Dinh Vu - Cat Hai Economic Zone, Cat Hai Island, Cat Hai Town,

Cat Hai District,

Hai Phong City, Vietnam

10. Explanation of pictograms used

	General warning sign		Cable cut
	Warning, Electricity		Use water to extinguish the fire
	Electric Vehicle		Left hand drive
	Hood Bonnet		Boot Trunk
	Explosive		Gases under pressure
	Acute toxicity		Hazardous to the human health
	Flammable		Oxidizer
	Corrosives		High strength zone
	Gas strut, preloaded spring		Airbag inflator / stored gas inflator
	Seat belt pre-tensioner		Use thermal Infrared camera
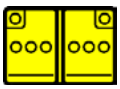	Battery low voltage		High voltage component
	Seat height adjustment		Seat adjustment, longitudinal
	Steering wheel, tilt control		Battery pack high voltage